Alpha® AIR-830/AIR-834/ AIR-850/AIR-854 Pneumatic Polishers Parts List



Part No: AIR-830/AIR-834/AIR-850/AIR-854
Version 8/2022

Alpha Professional Tools®
16 Park Dr Ste 9, Franklin, NJ 07416 • 800-648-7229 • Fax: 800-286-0114
www.alpha-tools.com

ALPHA® AIR-830/834/850/854 PNEUMATIC POLISHER

#-a = AIR-830/834
#-b = AIR-850/854

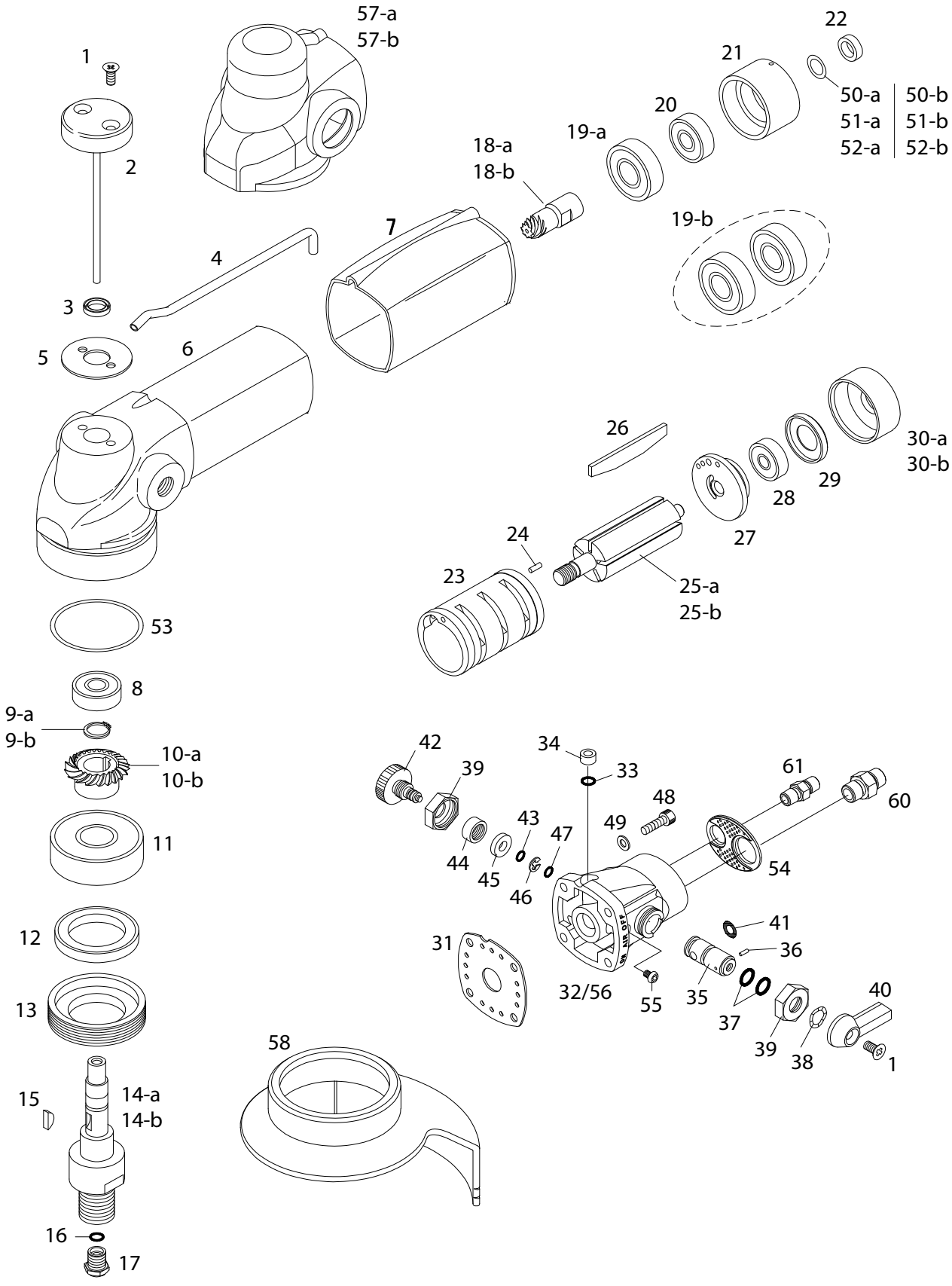

ACCESSORIES

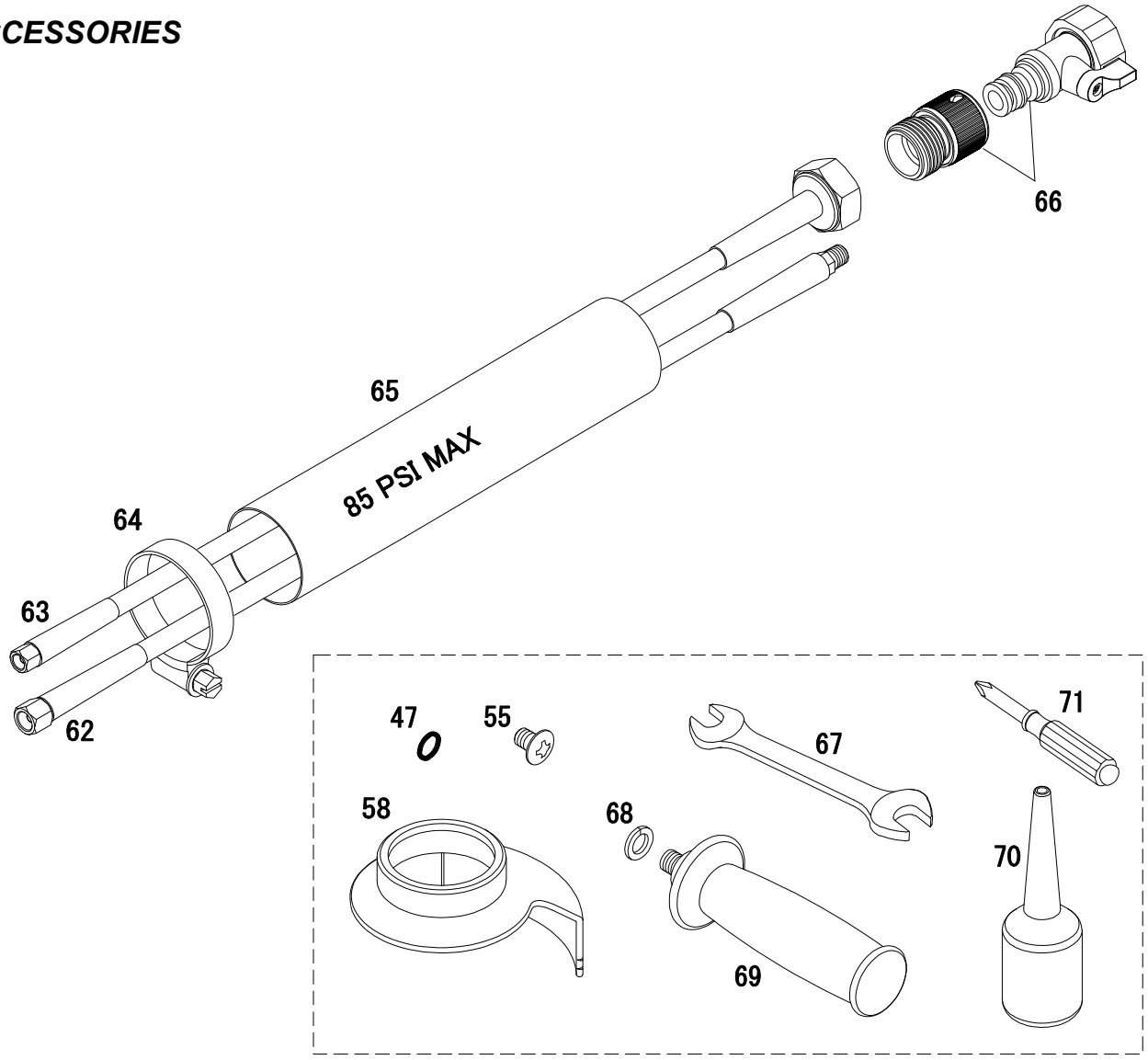

OPTIONAL PARTS

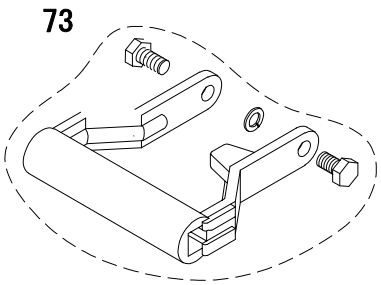

ALPHA® AIR-830/834/850/854 PNEUMATIC POLISHER PARTS

DRAWING NO.	PART NO.	DESCRIPTION	QTY
1	658-01	Flat Head Screw M4x12	3
2	658-92	Pipe-Joint Assembly	1
3	516-44	Oil Seal	1
4	658-09	W-Pipe	1
5	658-10	Head Packing	1
6	658-11	Body	1
7	658-12	Body Cover	1
8	516-20	Ball Bearing (608ZZ)	1
9-A	658-16	Snap Ring (S-10) For AIR-830/834	1
9-B	658-115	Snap Ring (GV-10) For AIR-850/854	1
10-A	658-17	Spiral Bevel Gear For AIR-830/834	1
10-B	658-116	Spiral Bevel Gear For AIR-850/854	1
11	516-48	Ball Bearing (6302ZZ)	1
12	516-49	Oil Seal	1
13	516-50	44mm Nut	1
14-A	658-100	Spindle 5/8”-11 Thread	1
14-B	658-155	Spindle M14 Thread	1
15	658-22	Woodruff Key	1
16	658-23	O-Ring (1.7mm X 2.75mm)	1
17	658-24	Spray Nozzle	1
18-A	658-25	Spiral Bevel Pinion For AIR-830/834	1
18-B	658-117	Spiral Bevel Pinion For AIR-850/854	1
19-A	516-18	Ball Bearing (6001)	1
19-B	658-118	Ball Bearing (6000ZZ)	2
20	516-20	Ball Bearing (608ZZ)	1
21-A	658-28	Front Bearing Case For AIR-830/834	1
21-B	658-119	Front Bearing Case For AIR-850/854	1
22-A	658-29	Rotor Spacer For AIR-830/834	1
22-B	658-120	Rotor Spacer For AIR-850/854	1
23	658-101	Cylinder (Inc. Part # 658-31)	1
24	658-31	Spring Pin	1
25-A	658-102	Rotor 5 Vane For AIR-830/834	1
25-B	658-121	Rotor 5 Vane For AIR-850/854	1
26	658-103	Vanes (5 Pc Set)	1

ALPHA® AIR-830/834/850/854 PNEUMATIC POLISHER PARTS

DRAWING NO.	PART NO.	DESCRIPTION	QTY
27	516-26	Rear Bearing Case	1
28	516-27	Ball Bearing (626ZZ)	1
29	516-28	Bearing Cap	1
30-A	658-37	Air Inlet Case for AIR-830/834	1
30-B	658-122	Air Inlet Case for AIR-850/854	1
31	658-89	Body Gasket	1
32	658-104	Endcase Assembly (inc. Part # 658-72, 73, 91 & 105)	1
33	658-72	O-Ring / 1.9x3.8 (mm)	1
34	658-73	Bushing 07	1
35	658-87	Air Valve (inc. Part # 658-88)	1
36	658-88	Needle Pin	1
37	658-47	O-Ring (KS-5)	2
38	658-45	Wave Washer	1
39	658-46	Nut M14	2
40	658-50	Air Valve Lever	1
41	658-105	O-Ring (Inside Of Air Valve Pipe)	1
42	658-106	Water Valve (inc. Part # 658-108)	1
43	658-64	O-Ring	1
44	658-107	M8 Nut	1
45	658-67	Washer 05	1
46	658-65	E-Ring	1
47	658-108	O-Ring (P-2)	2
48	658-145	Socket Head Screw M4 x 15	4
49	658-144	Washer 04	4
50-A	658-80	Shim (D8xT0.10mm)	1
51-A	658-81	Shim (D8xT0.03mm)	1
52-A	658-82	Shim (D8xT0.05mm)	1
50-B	658-123	Shim (D10xT0.10mm)	1
51-B	658-124	Shim (D10xT0.03mm)	1
52-B	658-125	Shim (D10xT0.05mm)	1
53	658-84	Shim (0.20mm)	1
54	658-109	Silencer	1
55	658-91	Screw (w/O-Ring Seal (1 in tool + 1 spare))	2
56	658-110	Complete Endcase Assembly	1

DRAWING NO.	PART NO.	DESCRIPTION	QTY
57-A	658-111	Head Cover (Yellow) for AIR-830/834	1
57-B	658-126	Head Cover (Blue) for AIR-850/854	1
58	658-112	Splash Guard	1
60	1030-1021	Union Fitting For Air 1/4”	1
61	1030-1020	Union Fitting For Water 1/8”	1
62	1030-0002	Air Hose Assembly	1
63	1030-0003	Water Hose Assembly	1
64	1030-1104	Hose Clamp	1
65	3003-0066	Exhaust Hose 1m (85 PSI Max)	1
66	658-113	Water Quick Coupler with Shut-off Valve	1
67	1030-1103	Double Open End Wrench (19mm/22mm)	1
68	658-13	Spring Washer M10	1
69	658-14	Side Handle	1
70	AIR-008	Rust Inhibitor Oil 6 oz.(200ml)	1
71	658-114	Phillips Screwdriver (P1)	1
73	1030-0004	C-Shaped Handle	Option