## CARE AND MAINTENANCE:

- Clean regularly with normal detergent and warm water.
- Always make a habit of drying your sink after use and buffing with a soft cloth. This will ensure that no buildup of limescale or other mineral deposits can occur.
- Clean the sink once or twice a month using a nonabrasive cleanser such as Barkeeper's Friend and a clean, soft sponge. Scrub in the same direction as the natural grain of the sink.
- Never let soap or other household cleaners dry on the surface of the sink. Most products contain additives which will affect the finish of the sink.
- Never use bleach solutions on the sink, as it is harmful to stainless steel. If left on the sink too long, it can cause surface pitting.
- Never use a steel wool pad to clean your sink. Doing so may damage the sink's surface and cause discoloration.
- Minor scratching of the sink's surface is extremely difficult to avoid and is not something to be unduly concerned about. These marks are usually only superficial and can be removed with a proprietary stainless steel cleaner.
- Use of rinse grids will reduce exposure of the bottom of the sink to scratches.

## RUVATI LIMITED LIFETIME WARRANTY

This product has been manufactured and inspected to the highest possible quality standards. Ruvati sinks carry a limited lifetime warranty for residential use.

Should you experience any defects in materials or workmanship within the warranty period, we will repair or replace the defective product, subject to the following conditions:

• Any claim made under this warranty must include a copy of a valid proof of purchase showing the date and place of purchase.
• Our obligation under this warranty is to the original purchaser only, and may not be transferred.
• Product replacement does not include shipping costs or labor installation costs.
• This warranty applies to residential installations only.
• Ruvati reserves the right to examine product in question and its installation prior to replacement.
• If an identical replacement product is not available, Ruvati reserves the right to replace the defective product with a similar product.

**NOTE: Accessories such as rinse grids, cutting boards, strainers are not covered by this warranty.**

This warranty relates to defects in manufacture, materials or workmanship in a Ruvati stainless steel kitchen sink supplied for installation into domestic premises in the United States. It does not extend to :

• Damage resulting from failure to maintain the product in accordance with the Care and Maintenance instructions in this manual.
• Normal wear and tear, scratches or accidental damage.
• Faults arising from improper use and/or installation.
• Defects in accessories, strainers and rinse grids.

**All incidental or consequential damages are specifically excluded. No additional warranties, express or implied are given, including but not limited to, any implied warranty of merchantability or fitness for a particular purpose.**

Some states do not allow the exclusion or limitation of incidental or consequential damages or limitations on how long an implied warranty lasts, so the above limitations or exclusions may not apply to you. This warranty gives you specific legal rights, and you may also have other rights which vary from state to state.

Register your product at: www.ruvati.com/register

RUVATI®
**Address:** 2705 Meister Pl, Round Rock, TX 78664
**USA Phone:** 1.855.478.8284
**Email:** support@ruvati.com



RUVATI®

# INSTALLATION GUIDE

# UNDERMOUNT WORKSTATION SINK

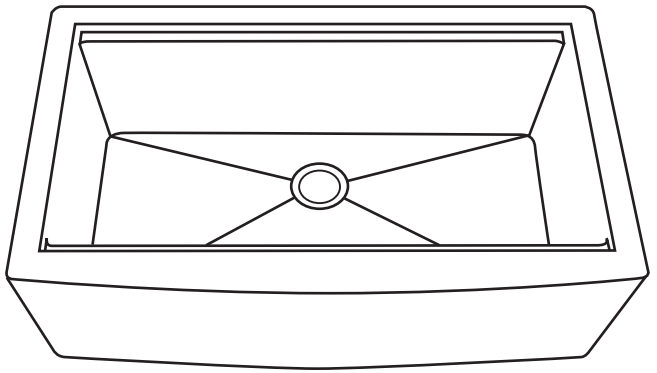

RVH9020, RVH9050, RVH9100, RVH9200, RVH9201
RVH9222, RVH9266, RVH9300, RVH9301
RVH9333, RVH9633

RUVATI USA
www.ruvati.com

## ATTENTION INSTALLER:

Please read all information below and keep this installation guide for future reference.

Keep the sink fully covered after installation to keep away dirt and construction dust, until all construction is complete and the site has been cleaned.

Ruvati recommends that this sink be installed only by a professional installer.

**Sink edges may be sharp and can cause accidental injury if not careful. Wear cut-resistant protective gloves during installation.**

Inspect the sink and box contents immediately upon delivery. If you see any shipping damages on the sink, or missing parts, contact Ruvati Support.

Due to the special nature of this sink, and the various installation options available, no cutout template is provided. Use the actual sink for cutout measurement. Ruvati recommends that an experienced cabinet maker use the actual sink to build a custom cabinet or modify an existing cabinet. **Ruvati is not liable for any damages to sink or countertop or personal injury during installation.**

Follow all local plumbing and building codes.

## TOOLS REQUIRED

Plumbers Putty
Silicon Caulk
Jigsaw or Keyhole Saw
Pencil

## REVEAL

Alignment of sink to cutout is critical for a superior fit and finished look. Depending on your aesthetic preference, Ruvati sinks can be installed either with a 1/4" reveal or a flush fit. 1/4" reveal is recommended. Decide on your preference prior to installation.

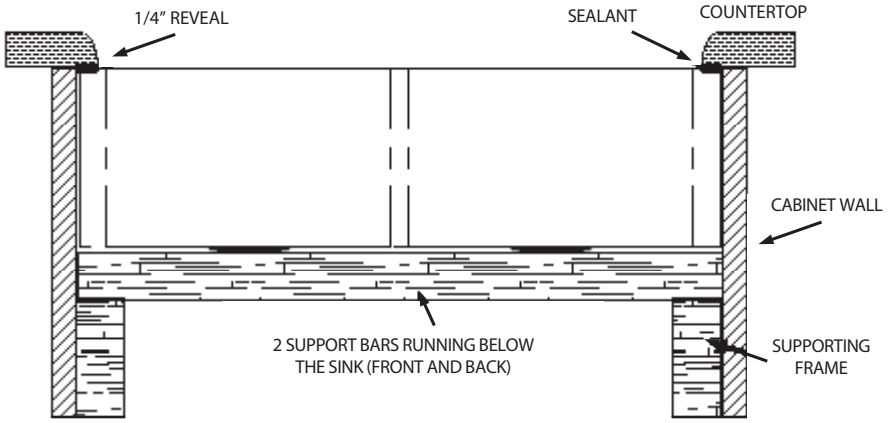




## INSTRUCTIONS

1. Measure sink apron and cabinet opening to make sure sink apron will fit into cabinet opening. If necessary, sand opening or add wood filler strips.

2. Prepare the cabinet and create a support frame inside the cabinet that the sink will sit on. Use 2x4 solid wood studs to create the support frame. Your cabinet and support frame should be strong enough to hold up to 200 lbs of weight once installed. The support frame should be positioned so that the top of the sink rim is level and flush with the top surface of the cabinet perimeter. Make sure the support frame leaves room for the drains, faucet water lines, garbage disposal (if any).

3. Place a thin layer of sealant on the supporting frame where it will contact the sink.

4. Gently position the sink on the frame. Verify that the sink sits level and sturdy on the frame, and the top surface of the sink is level and flush with the top surface of the cabinet perimeter. Adjust or shim between the sink and support if necessary.

5. Due to the various cutout sizes possible (based on your preference) a cutout template is not provided. Use the actual sink measurement to determine the actual location of the cutout. Ensure adequate clearance behind the sink for any faucet and backsplash.

6. Trace cut-out opening on the countertop. Cut out the opening in the counter top. Use an Orbital sander or sanding block to smooth the edge of the cut-out area and remove all saw marks. For laminate type countertop, all exposed unlaminated surfaces near the cut-out opening must be adequately finished and sealed to prevent water damage.

7. Clean the rim of the sink and the under surface of the countertop where it will contact the rim. Apply a generous bead of sealant around the sink rim.

8. Gently position the countertop on the sink. Ensure that the sealant provides a complete seal between the countertop and the sink. Wipe off any extra sealant using a wet cloth, and apply extra sealant if there are any gaps.

**RUST SPOTS?**

This sink is made of T-304 stainless steel which can never rust. If you see rust spots in your sink, it's due to external rust or iron particle contaminants. These rust particles attach to the sink surface, forming rust stains. Clean the rust stains with "Barkeeper's Friend" cleaning powder and a dish scrubbing sponge. Scrub in the direction of the grain. Use toothbrush for corners and edges. Rinse thoroughly with water.

RUVATI USA
www.ruvati.com