RUVATI LIMITED LIFETIME WARRANTY

RUVATI offers a LIMITED LIFETIME WARRANTY on sinks to be free of manufacturing defects under normal use.

This limited warranty is extended to the original purchaser of this sink. RUVATI will repair or replace, at no charge, excluding transportation and labor, any sink supplied by RUVATI that is proven to have a manufacturing defect, to the original purchaser, provided it has been used solely in a residential application and installed correctly. An equivalent replacement will be issued to the original owner provided the defective sink was installed in accordance with the installation procedures, used and cleaned as recommended, and not damaged due to abuse, misuse, or negligence. Chips, scratches, and stains are not deemed to be manufacturing defects. RUVATI will not be held liable for chips, scratches, and stains that can occur under normal use over a period of time. Please refer to the cleaning instructions to maintain your sink. RUVATI shall not be held liable under this warranty where the sink has been used in a non-residential application, improperly installed, or damaged by an object being dropped on or impacting the sink or from improper handling.
RUVATI shall not be liable for any inconvenience or expense for material or labor related to the removal or replacement of a defective sink or for any loss or damage to any person or property whatsoever resulting from the defective sink. All transportation costs to and from the point of purchase will be the responsibility of the purchaser. Any sink returned must be in the original packaging and include all the accompanying accessories, parts, and documentation. The manufacturer reserves the right to inspect and/or request digital pictures of any sink reported to be defective prior to replacement of the sink.

Any manufacturing defect covered under this warranty must be reported to RUVATI for warranty claim within 30 days of appearance.

RUVATI shall not be liable in case of:
- Shipping or freight damage
- Chipping
- Cuts and nicks
- Scratches or scuff marks due to use
- Common signs of wear
- Holes drilled incorrectly
- Installation damage
- Abuse or misuse (i.e. impact damage, hot pots placed in the sink, etc.)

It is important that the professional fabricator installer and end-user carefully inspect the sink for damage immediately upon delivery. If any damage is not reported and documented on the delivery receipt with the shipping carrier upon delivery all insurance coverage ends and RUVATI will not be able to file a claim or send a replacement sink.

To submit a warranty claim it is the responsibility of the customer or installer to submit to RUVATI a minimum of five (5) high resolution photographs clearly showing the manufacturing defect. Replacement cost excludes transportation and any labor costs for the removal or reinstallation.

No other warranties, express or implied, are made. Under no circumstances shall RUVATI be liable for any loss or damage arising from the purchase, a defect in, or use or inability to use this sinks, or for any special, indirect, incidental or consequential damages. RUVATI's liability under this warranty is limited to the repair or replacement of the defective material to the location of purchase. No representative, dealer or any other person is authorized to make any warranty, representation or promise on behalf of RUVATI.

Register your product at: www.ruvati.com/register

RUVATI®
Address: 2705 Meister Pl, Round Rock, TX 78664
USA Phone: 1.855.478.8284
Email: support@ruvati.com

RUVATI®

INSTALLATION GUIDE

CERAMIC UNDERMOUNT BATHROOM SINK

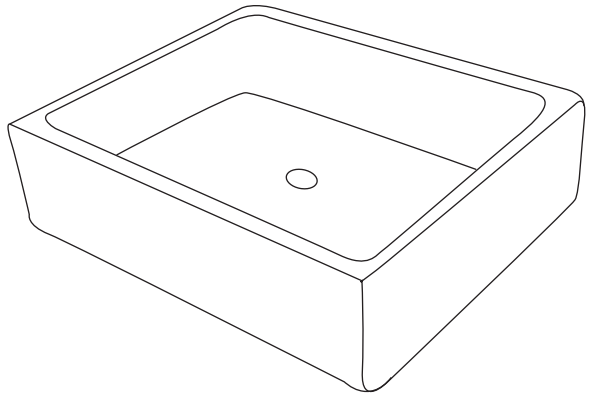

RVB0613, RVB0616, RVB0618, RVB0619, RVB0621
RVB0718, RVB0720, RVB0721, RVB0723, RVB0742

RUVATI USA
www.ruvati.com

ATTENTION INSTALLER

- Please read all information below and keep this installation guide for future reference.
- Keep the sink fully covered after installation to keep away dirt and construction dust, until all construction is complete and the site has been cleaned.
- Ruvati recommends that this sink be installed only by a professional installer.
- Inspect the sink and box contents immediately upon delivery. If you see any shipping damages on the sink, or missing parts, contact Ruvati Support.
- Do not start the cutout or cabinet prep process before having the sink in hand.
- It is recommended that you discuss with customer the desired installation position of sink and faucet prior to installation. Ruvati is not responsible for improper installation or damage to sink, cabinet or countertop.
- Follow all local plumbing and building codes.

INCLUDED IN BOX

Sink
Cutout Template
Mounting Clips and Screws (x4)
Installation Guide

TOOLS REQUIRED

Safety glasses
Level
Framing Square
Tape Measure
Drill
Silicone Adhesive
Plumbers Putty
Caulking
Pencil or Marker

INSTALLATION

1. Place the template on the countertop where you would like your sink to be. Note the location of the doors and panels of the cabinetry to ensure there will be enough room for your sink and mounting clips installation. Also make sure to leave enough room behind the sink for faucet installation.

   Fix the template on the counter using masking tape.

   Trace a line around the template. Remove the template. Cut your countertop along the line.

2. Determine position of the four (4) mounting clips. Loosely install the clips.

3. Generously apply silicone sealant around the rim of the sink

4. Position the sink under the opening. Hold the sink in place. Affix the mounting clips and tighten to secure. Wipe away excess silicone.

5. Complete the installation of faucet and drain (not included). This sink has a standard size drain hole and requires a drain with overflow. Run water through the sink and check for any leaks.

1.

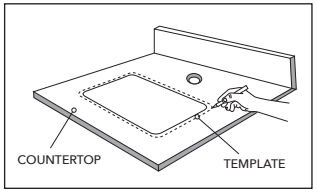

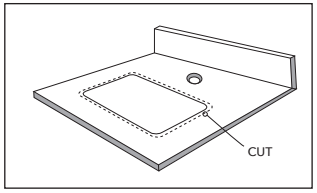

2.

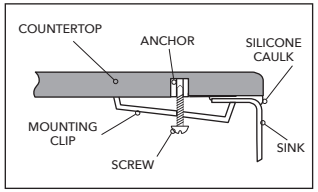

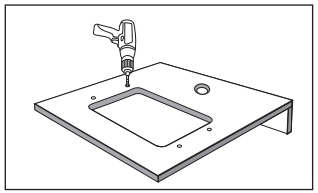

3.

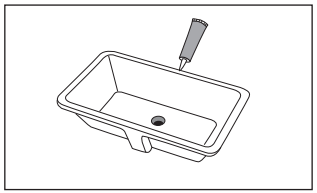

4.

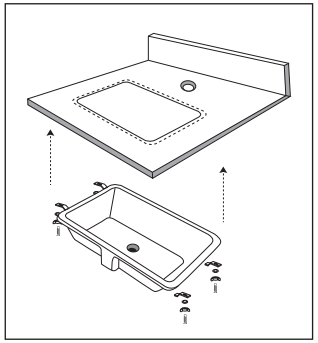

RUVATI USA
www.ruvati.com