RVB6732
FREESTANDING BATH TUB

RUVATI®
SPECIFICATION SHEET

MATERIAL

- EPISTONE: High-quality innovative composite material that produces a hard surface and requires little maintenance.



FEATURES

- SATIN MATTE POWDER FINISH: Natural beauty similar to stone and silky to the touch.
- OVAL SHAPE: For maximum comfort and easy cleaning.

COLOR OPTIONS

WH: White

IN THE BOX

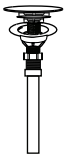

Popup Drain
[RVA6104WH]

NOMINAL DIMENSIONS
Exterior: 69" x 31-1/2" x 22"
Interior: 65-1/2" x 28" x 17-3/4"
Drain Hole Size: 2-1/4"

Installation Type:
Freestanding

Drain Location:
Center

RUVATI USA
www.ruvati.com

Phone: 1.855.478.8284
Email: support@ruvati.com

DIMENSIONS

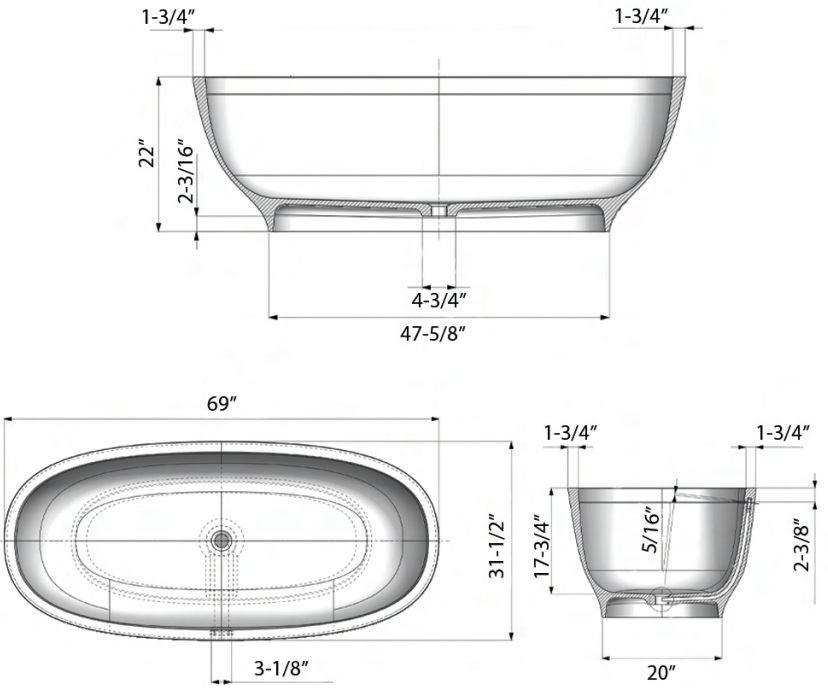

SCAN TO REGISTER YOUR WARRANTY

or visit
www.ruvati.com/register

RUVATI USA
www.ruvati.com

Phone: 1.855.478.8284
Email: support@ruvati.com