RVH6211
SEMI-RECESSED BATHROOM SINK

RUVATI®
SPECIFICATION SHEET

MATERIAL
- True 16 Gauge Thickness
- Premium T304 Grade Stainless Steel
- 18/10 Chromium/Nickel Content



FEATURES
- Heavy duty sound guard padding and undercoating
- D-shaped curved bowl for perfect water drainage
- Push pop-up drain included

COLOR OPTIONS
- **RVH6211ST:** Brushed Stainless Steel
- **RVH6211BL:** Gunmetal Black Stainless Steel
- **RVH6211GG:** Satin Gold Stainless Steel

IN THE BOX

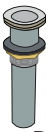

Popup Drain
[RVA5103ST/BL/GG]

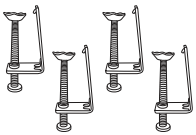

Mounting Clips
[RVA11042]



Cut-out
Template

NOMINAL DIMENSIONS
Exterior: 20" (wide) x 14" (front-to-back)
Interior Bowl: 18" (wide) x 12" (front-to-back)
Bowl Depth: 6"
Minimum Cabinet Size: 22" wide
Drain Hole Size: 1-5/8"

Installation Type:
Topmount

Drain Location:
Rear Center

RUVATI USA
www.ruvati.com

Phone: 1.855.478.8284
Email: support@ruvati.com

DIMENSIONS

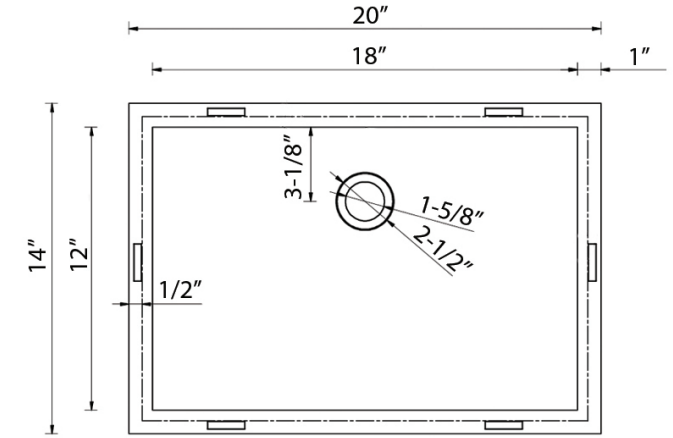

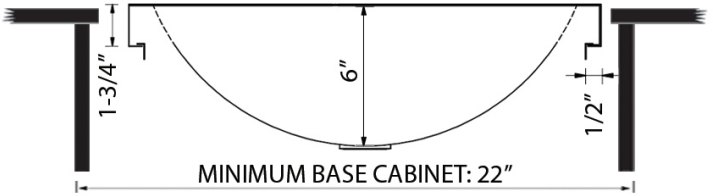

cUPC certified by IAPMO to meet US and Canada plumbing standards.

SCAN TO REGISTER YOUR WARRANTY

or visit ruvati.com/register

RUVATI USA

www.ruvati.com

Phone: 1.855.478.8284

Email: support@ruvati.com