RVH7200
UNDERMOUNT KITCHEN SINK

RUVATI®
SPECIFICATION SHEET

MATERIAL

True 16 Gauge Thickness
Premium T304 Grade Stainless Steel
18/10 Chromium/Nickel Content
Commercial Brushed Finish



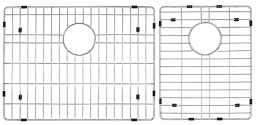



FEATURES

- Heavy duty sound guard padding and undercoating
- Slanted bottom with elegant drain grooves for easy draining
- 60/40 Double Bowl Sink

IN THE BOX

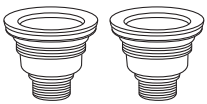

Basket Strainer
[RVA1025] x 2

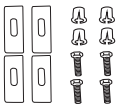

Mounting Clips
[RVA11031]



Cut-out
Template

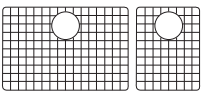

Rinse Grid
[RVA67200]

NOMINAL DIMENSIONS

Exterior: 29" (wide) x 19" (front-to-back)
Interior Bowl: 15½" x 17" (left), 10½" x 17" (right)
Bowl Depth: 10"
Minimum Cabinet Size: 33" wide
Drain Hole Size: 3½"

Installation Type: Undermount
Inside Corners: Zero Radius
Drain Location: Rear Center

RUVATI USA
www.ruvati.com

Phone: 1.855.478.8284
Email: support@ruvati.com

OPTIONAL ACCESSORIES (SOLD SEPARATELY)



Deep Basket
Disposal Flange
[RVA1049ST]



Deep Basket
Disposal Flange/Stopper
[RVA1052ST]



Garbage Disposal
Flange/Stopper
[RVA1042ST]



Deep Basket Strainer
and Stopper
[RVA1027ST]



Drain Cover
[RVA1035]

DIMENSIONS

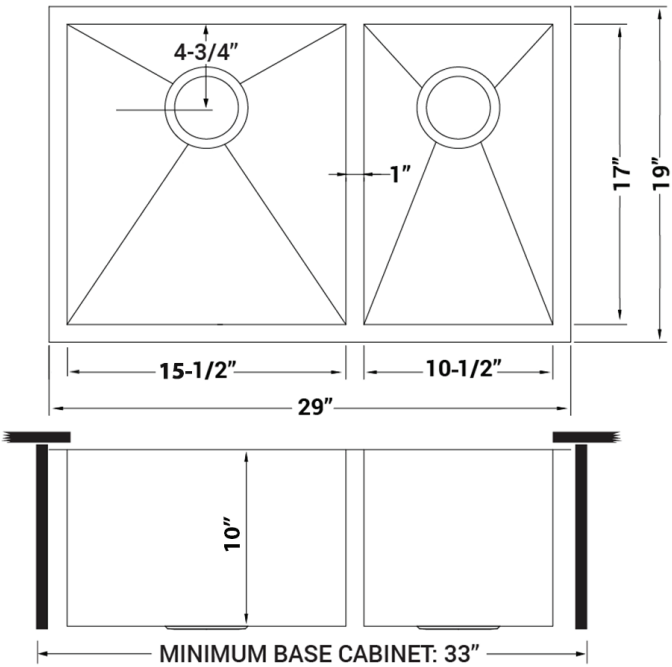

cUPC certified by IAPMO
to meet US and Canada
plumbing standards.

SCAN TO REGISTER YOUR WARRANTY

or visit
ruvati.com/register

RUVATI USA
www.ruvati.com

Phone: 1.855.478.8284
Email: support@ruvati.com