RVU6100
UNDERMOUNT LAUNDRY SINK

RUVATI®
SPECIFICATION SHEET

MATERIAL

True 16 Gauge Thickness
Premium T304 Grade Stainless Steel
18/10 Chromium/Nickel Content
Commercial Brushed Finish



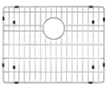



FEATURES

- Heavy duty sound guard padding and undercoating
- Slanted bottom with elegant drain grooves for easy draining
- Extra deep sink for utility room

IN THE BOX



Basket Strainer
[RVA1025]

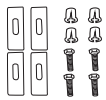

Mounting Clips
[RVA11031]

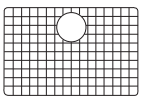

Rinse Grid
[RVA67100]



Cut-out
Template

NOMINAL DIMENSIONS

Exterior: 23" (wide) x 18" (front-to-back)
Interior Bowl: 21" (wide) x 16" (front-to-back)
Bowl Depth: 12-3/8"
Minimum Cabinet Size: 25" wide
Drain Hole Size: 3½"

Installation Type:
Undermount

Inside Corners:
Zero Radius

Drain Location:
Rear Center

RUVATI USA
www.ruvati.com

Phone: 1.855.478.8284
Email: support@ruvati.com

OPTIONAL ACCESSORIES (SOLD SEPARATELY)



Deep Basket
Disposal Flange
[RVA1049ST]

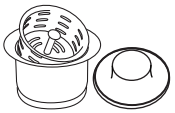

Deep Basket
Disposal Flange/Stopper
[RVA1052ST]



Drain Cover
[RVA1035]



Deep Basket Strainer
and Stopper
[RVA1027ST]

DIMENSIONS

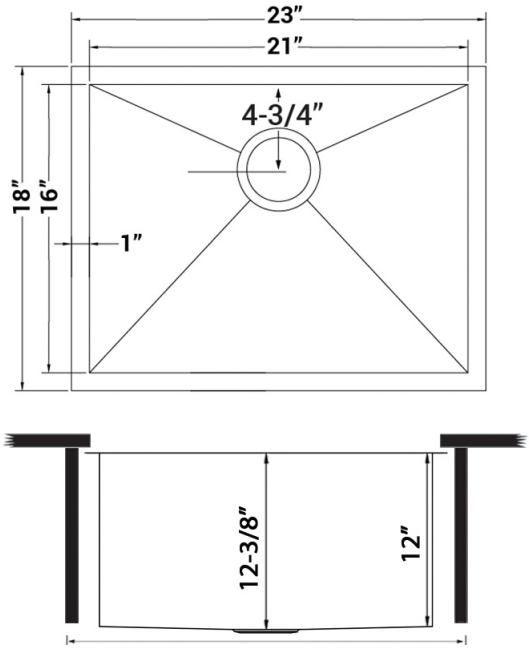

MINIMUM BASE CABINET: 25″

cUPC certified by IAPMO
to meet US and Canada
plumbing standards.

SCAN TO REGISTER YOUR WARRANTY

or visit
ruvati.com/register

RUVATI USA
www.ruvati.com

Phone: 1.855.478.8284
Email: support@ruvati.com