BUILDER SERIES
STAINLESS STEEL SINKS

Introducing the Builder Series Würkstation Apron Front sink: the classic farmhouse look with a built-in work ledge and a complete 5-piece accessory kit. A great value sink designed to give you the competitive edge on residential and commercial projects.

• SATIN FINISH • 16-GAUGE APRON • WORKSTATION LEDGE

SUWURKAP3022-SS

Apron Front Würkstation Handmade Single Bowl Sink

SKU: SU-WURKAP3022

30" x 22" O.D. x 10" D. | 9" Apron

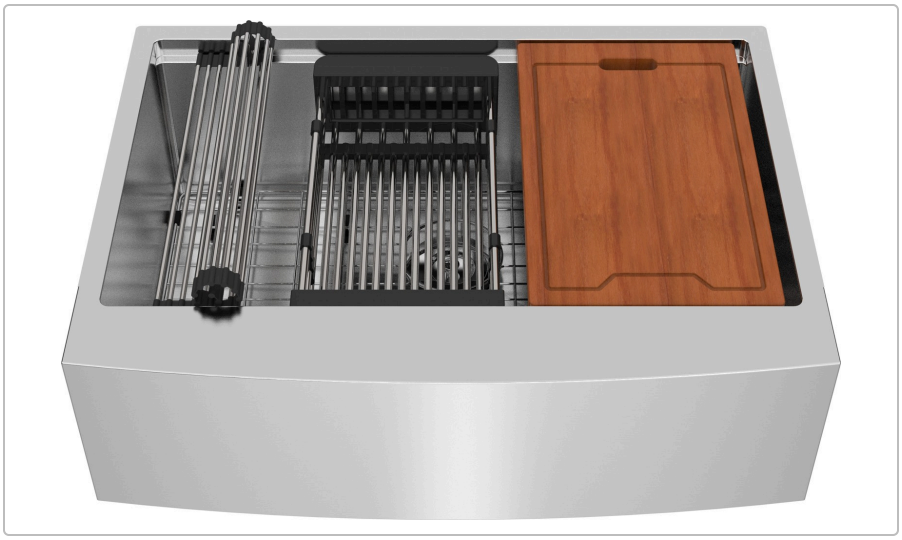

Features

- Handmade Construction
- 16-Gauge Apron / 18-Gauge Bowl
- 304 Series Stainless Steel
- Integrated Work Ledge
- R10 Radius Corners
- Satin Finish
- Sound Dampening Pads
- Fully Insulated Spray Coating
- Rear-Set 3-1/2" Drain
- Support Brackets Included

Includes 5-Piece Accessory Kit

- Hardwood Cutting Board
- Adjustable Wash/Drain Basket
- Roll-Up Drying Rack
- Stainless Steel Bottom Grid
- Deluxe Sink Strainer with Basket – Stainless Steel (SSS-D07)

Also Includes

- Mounting Fasteners (8)
- Paper Cutout Template

Warranty

Limited Lifetime Warranty

DIMENSIONS (NOMINAL, ±1/16")

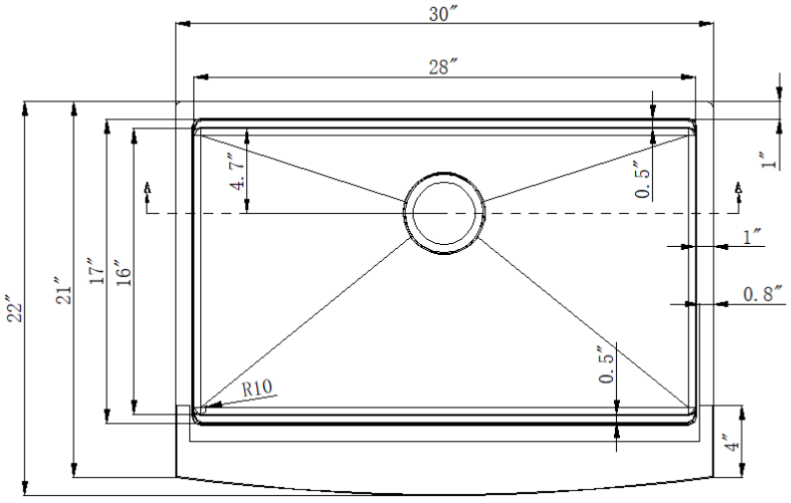

Overall (O.D.)	30" W x 22" F-B
Bowl (I.D.)	28" x 16" | Bowl Depth 10" D.
Apron Height	9"
Minimum Base Cabinet	33"